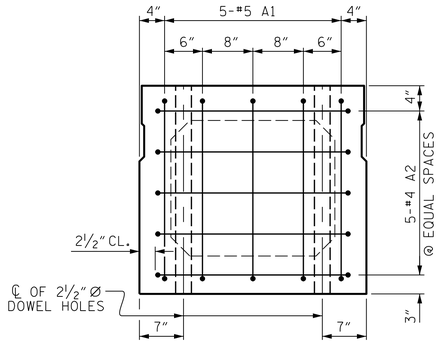

END ELEVATION

SHOWING PLACEMENT OF #5 & #4 "A" BARS AND LOCATION OF DOWEL HOLES. (INTERIOR BOX BEAM SECTION SHOWN-EXTERIOR SECTION SIMILAR EXCEPT SHEAR KEY LOCATION. STRAND LAYOUT NOT SHOWN.)

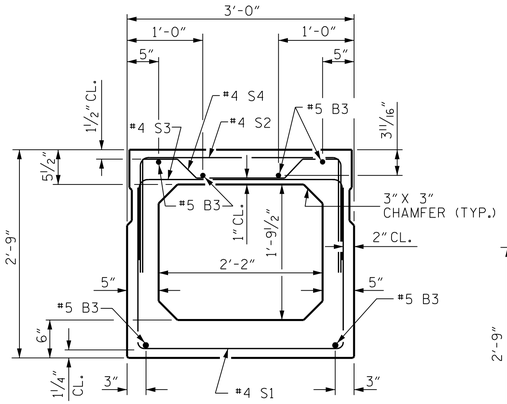

INTERIOR BOX BEAM SECTION

(STRAND LAYOUT NOT SHOWN)

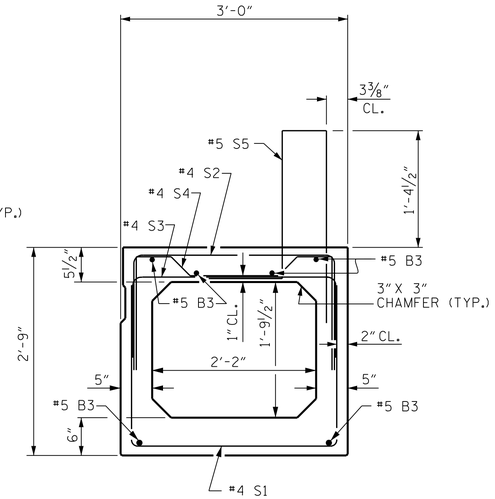

EXTERIOR BOX BEAM SECTION

(STRAND LAYOUT NOT SHOWN)

0.6" Ø LOW RELAXATION STRAND LAYOUT

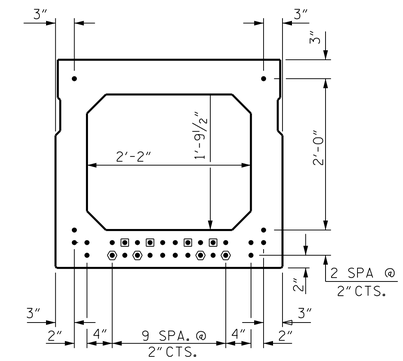

TYPICAL STRAND LOCATION

(30 STRANDS REQUIRED)

DEBONDING LEGEND

- ● FULLY BONDED STRANDS
- ▣ STRANDS DEBONDED FOR 4'-0" FROM END OF GIRDER
- ⬢ STRANDS DEBONDED FOR 12'-0" FROM END OF GIRDER

BOND SHALL BE BROKEN ON STRANDS AS SHOWN FOR THE SPECIFIED LENGTH FROM EACH END OF THE BOX BEAM. SEE STANDARD SPECIFICATIONS ARTICLE 1078-7.

BAR TYPES

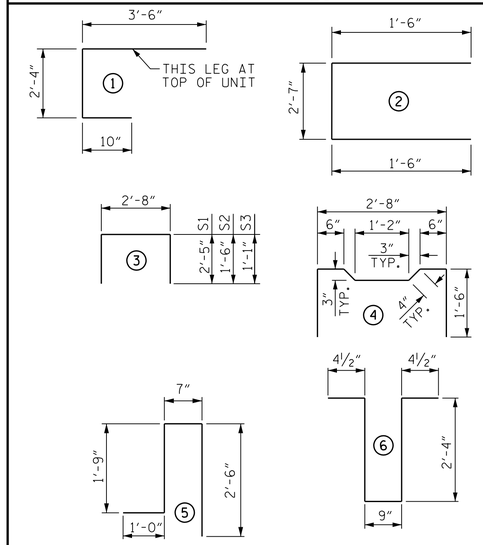

ALL BAR DIMENSIONS ARE OUT TO OUT

BILL OF MATERIAL FOR ONE BOX BEAM SECTION

BAR	NUMBER	SIZE	TYPE	EXTERIOR UNIT LENGTH	EXTERIOR UNIT WEIGHT	INTERIOR UNIT LENGTH	INTERIOR UNIT WEIGHT
A1	10	#5	1	6'-8"	70	6'-8"	70
A2	34	#4	2	5'-7"	127	5'-7"	127
B3	12	#5	STR	43'-5"	543	43'-5"	543
K1	12	#4	6	6'-2"	49	6'-2"	49
K2	8	#4	STR	2'-7"	14	2'-7"	14
S1	71	#4	3	7'-6"	356	7'-6"	356
S2	71	#4	3	5'-8"	269	5'-8"	269
S3	121	#4	3	4'-10"	391	4'-10"	391
S4	50	#4	4	5'-10"	195	5'-10"	195
✳ S5	118	#5	5	5'-10"	718	--	--
REINFORCING STEEL				2014 LBS.		2014 LBS.	
✳ EPOXY COATED REINF. STEEL				718 LBS.			
8000 P.S.I. CONCRETE				15.1 CU. YDS.		15.0 CU. YDS.	
0.6" Ø L.R. STRANDS				No. 30		No. 30	

GRADE 270 STRANDS

	0.6" Ø L.R.
AREA (SQUARE INCHES)	0.217
ULTIMATE STRENGTH (LBS. PER STRAND)	58,600
APPLIED PRESTRESS (LBS. PER STRAND)	43,950

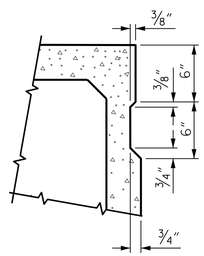

SHEAR KEY DETAIL

NOTE: OMIT SHEAR KEY ON OUTSIDE FACE OF EXTERIOR BOX BEAMS.

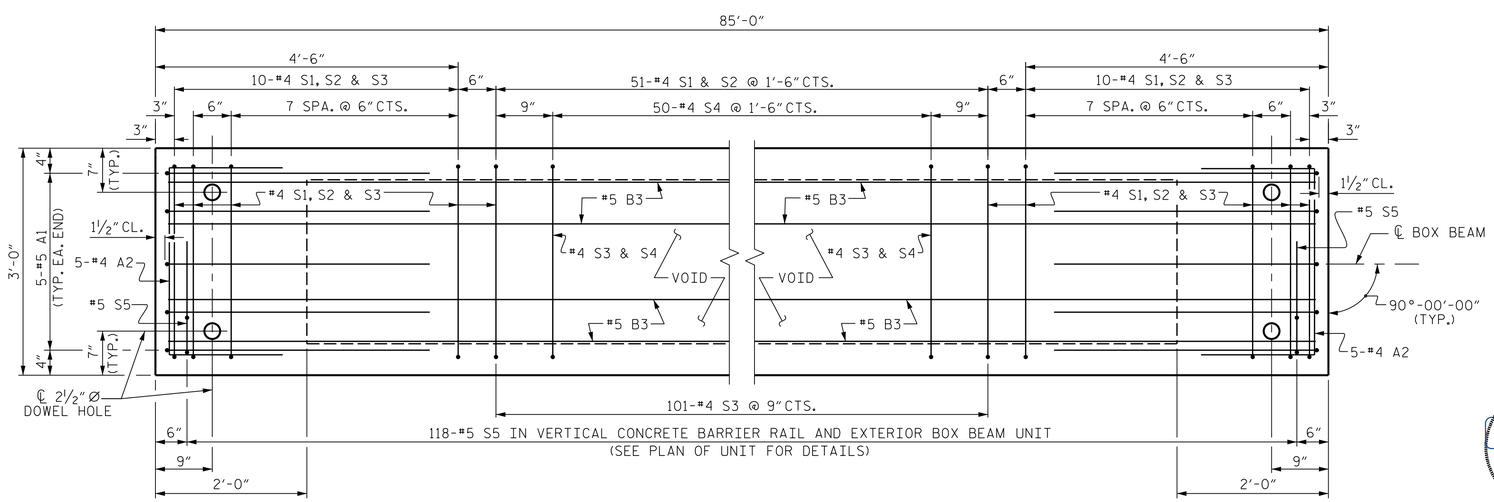

PLAN OF BOX BEAM

EXTERIOR UNIT SHOWN, INTERIOR UNIT SIMILAR EXCEPT OMIT #5 S5 BARS.
FOR LOCATION OF DIAPHRAGMS, SEE "PLAN OF UNIT".
FOR THREADED INSERTS, SEE "THREADED INSERT DETAIL".
FOR REINFORCING STEEL IN DIAPHRAGMS, SEE "DOUBLE DIAPHRAGM DETAILS".

PROJECT NO. 17BP.9.R.27
STOKES COUNTY
STATION: 13+12.50 -L-

SHEET 3 OF 5

STATE OF NORTH CAROLINA
DEPARTMENT OF TRANSPORTATION
RALEIGH
STANDARD

3'-0" X 2'-9"
PRESTRESSED CONCRETE
BOX BEAM UNIT

NORTH CAROLINA PROFESSIONAL SEAL 12323 ENGINEER MORRIS ISRAEL NAIM
11/6/2015

MI ENGINEERING
1011 SCHAUB DRIVE, SUITE 100
RALEIGH, NC 27606
(919) 851-6606
FIRM PE NUMBER : P-0671

REVISIONS						
NO.	BY:	DATE:	NO.	BY:	DATE:	
1			3			
2			4			

SHEET NO. S-7
TOTAL SHEETS 21

STD. NO. 33PCBB4_90S_85L

ASSEMBLED BY: B.E. LANNING		DATE: 11/15
CHECKED BY : B.E. ATKINSON		DATE: 11/15
DESIGN ENGINEER OF RECORD: B.E. ATKINSON		DATE: 11/15
DRAWN BY : DGE 10/11	REV. 9/14	MAA/TMG
CHECKED BY : TMG 11/11		

11/6/2015
11:21:54 AM
User: blanning
Filename: P:\NC Projects\2012 Archive\MI2002 - Div 09 Low Impact Bridge Replacement_RK&A\MI2002.01_Stokes 11 Cored Slab\17BP9R27\Structures\17BP9R27_SD_BBU3.dgn